3

Risk Assessment and Internal Control

3.1 Introduction

Audit risk means the risk that the auditor gives an inappropriate audit opinion when the financial statement are materially misstated. Thus, it is the risk that the auditor may fail to express an appropriate opinion in an audit assignment.

An auditor may consider audit risk both at overall level as well as at the level of individual account balances or classes of transactions. This means that at overall level the auditor applies their professional judgement to determine the extent of risk which he considers to be an acceptable level. At account balance level, audit risk refers to the risk that error in monetary terms exists beyond a tolerable error limit in the account balances or class of transaction which the auditor fails to defect.

The Internal Control structure in an organization is referred to as the policies and procedures established by the entity to provide reasonable assurance that the objectives are achieved. The control structure in an organization basically has the following components:

1. Control Environment - Control environment covers the effect of various factors like management attitude; awareness and actions for establishing, enhancing or mitigating the effectiveness of specific policies and procedures.

2. Accounting System - Accounting system means the series of task and records of an entity by which transactions are processed for maintaining financial records. Such system identifies, assemble, analyze, calculate, classify, record, summarize and report transactions and other events.

3. Control Procedure - Policies and procedures means those policies and procedures in addition to the control environment and accounting systems which the management has established to achieve the entity's specific objectives.

In this regard, the management is responsible for maintaining an adequate accounting system incorporating various internal controls to the extent that they are appropriate to the size and nature of the business. There should be reasonable assurance for the auditor that the accounting system is adequate and that all the accounting information required to be recorded has in fact been recorded. Internal controls normally contribute to such assurance. The auditor should gain an understanding of the accounting system and related internal controls and should study and evaluate the operation of those internal controls upon which he wishes to rely in determining the nature, timing and extent of other audit procedures. Where the auditor concludes that he can rely on certain internal controls, he could reduce his substantive procedures which otherwise may be required and may also differ as to the nature and timing.

Specific Requirement under SA 315 - "Identifying and Assessing the Risks of Material Misstatement through Understanding the Entity and its Environment" deals with the auditor's responsibility to identify and assess the risks of material misstatement in the financial statements, through understanding the entity and its environment, including the entity's internal control.. SA 315 defines the system of internal control as The process designed, implemented and maintained by those charged with governance, management and other personnel to provide reasonable assurance about the achievement of an entity's objectives with regard to reliability of financial reporting, effectiveness and efficiency of operations, safeguarding of assets, and compliance with applicable laws and regulations.SA 315 further states that the auditor should identify and assess the risks of material misstatement, whether due to fraud or error, at the financial statement and assertion levels, through understanding the entity and its environment, including the entity's internal control, thereby providing a basis for designing and implementing responses to the assessed risks of material misstatement. This will help the auditor to reduce the risk of material misstatement to an acceptably low level.

3.2 Internal Control System - Nature, Scope, Objectives and Structure

The Following are the Nature, Scope, Objectives and Structure of an Internal Control Audit:

Nature - A set of internally generated policies and procedures adopted by the management of an enterprise is a prerequisite for an organisations efficient and effective performance. It is thus, a primary responsibility of every management to create and maintain and adequate system of internal control appropriate to the size and nature of the business entity.

SA 315 defines the system of internal control as The process designed, implemented and maintained by those charged with governance, management and other personnel to provide reasonable assurance about the achievement of an entity's objectives with regard to reliability of financial reporting, effectiveness and efficiency of operations, safeguarding of assets, and compliance with applicable laws and regulations.

Scope - The scope of internal controls extends beyond mere accounting controls and includes all administrative controls concerned with the decision - making process leading to managements authorization of transaction, such controls include, production method, time and motion study, pricing policies, quality control, work standard, budgetary control, policy appraisal, quantitative controls etc. In an independent financial audit, the auditor is primarily concerned with those policies and procedures having a bearing on the assertions underlying the financial statements. These comprise primarily controls relating to safeguarding of assets, prevention and detection of fraud and error, accuracy and completeness of accounting records and timely preparation of reliable financial information. Administrative controls, on the other hand, have only a remote relationship with financial records and the auditor may evaluate only those administrative controls which have a bearing on the reliability of the financial records.

Objectives - The objectives of internal control systems are determined by the management, after considering the nature of business, scale operations, the extent of professionalism of the

management etc. the objectives of internal controls relating to the accounting system are :

(i) Transactions are executed through general or specific management authorization.

(ii) All transactions are promptly recorded in an appropriate manner to permit the preparation of financial information and to maintain accountability of assets.

(iii) Assets and records are safeguarded from unauthorized access, use or disposition.

(iv) Assets are verified at reasonable intervals and appropriate action is taken with regard to the discrepancies.

Precisely, the control objectives ensure that the transactions processed are complete, valid and accurate. The basic accounting control objectives which are sought to be achieved by any accounting control system are:

(a) whether all transactions are RECORDED;

(b) Whether recorded transactions are REAL;

(c) whether all recorded transactions are PROPERLY VALUED;

(d) whether all transactions are RECORDED TIMELY;

(e) whether all transactions are PROPERLY POSTED;

(f) whether all transactions are PROPERLY CLASSIFIED AND DISCLOSED;

(g) whether all transactions are PROPERLY SUMMARIZED;

If the response to all the above answer is positive, the auditor would be justified in limiting his account balance tests considerably. In case of excellent companies it may also be possible to rely on account balance with minimum of external tests, such as direct confirmation, management representation etc,. Where in a system a particular control is found to be deficient, audit attention can be focused on the areas where basic accounting control objectives are not being adhered to. For example, if it found that sales transactions are not being properly valued in accordance with the price list determined by the management, the auditor would have to perform extensive searching tests on sales invoices to assure himself that the recoverable amounts are correctly posted. He may also want to expand his confirmation request at the year end to cover a large majority of debtors.

Limitations of Internal Control - An Internal Control system can provide only reasonable assurance that the management's objectives in establishing the system are achieved. That is, no internal control system can provide absolute assurance that the control objectives are achieved. This is due to the fact that any internal control system has certain internal limitations. The limitations may arise due to:

(i) Controls have to be cost-effective.

(ii) Most controls address transaction of usual and routine nature. They fail in respect of transactions of unusual nature.

(iii) The potential of human error remains in any system of control.

(iv) In any system of control, the possibility of circumvention of controls through collusion

between two or more persons might exist.

(v) A member of the management may himself override the controls.

(vi) Controls may not keep pace with changes in condition.

(vii) Management itself may manipulate transactions or accounting estimates.

The inherent limitation of internal control system requires the auditor to perform substantive procedure to be able to express an opinion.

Structure - In order to achieve the objectives of internal controls, it is necessary to establish adequate control policies and procedures. Most of these policies and procedures cover:

Segregation of duties - Transaction processing are allocated to different persons in such a manner that no one person can carry through the completion of a transaction from start to finish or the work of one person is made complimentary to the work of another person. The purpose is to minimize the occurrence of fraud and errors and to detect them on a timely basis, when they take place. The following functions are segregated -

(a) authorization of transactions;

(b) execution of transactions;

(c) physical custody of related assets; and

(d) maintenance of records and documents, while allocating duties, the considerations of cost and efficacy should be kept in mind as there is a tendency to stretch the allocation of tasks involved in a job to more persons than what is required resulting in cumbersome procedures, over elaboration of records and unduly high cost of administration.

Apart from segregation of duties, periodic rotation of duties of personnel is also desirable. The rotation of duties seeks to ensure that if a fraud and error is committed by a person, it does not remain undetected for long. It also ensures that a person cannot develop vested interest by holding a position for to long. Rotation of duties also ensures that each employee keeps his work up to date. This also makes an employee to be careful because he is aware that his performed tasks will be reviewed by others when duties are rotated.

Authorization of Transaction - Delegation of authority to different levels and to particular persons are required to establish by the management for controlling the execution of transaction in accordance with prescribed conditions. Authorization may be general or it may be specific with reference to a single transaction. It is necessary to establish procedures which provide assurance that authorizations are issued by persons acting within the scope of their authority, and that the transactions conform to the terms of the authorizations. This objective can be achieved by making independent comparison of transaction document with general or specific authorizations, as the case may be.

Adequacy of Records and Documents - Accounting controls should ensure that -

(i) Transactions are executed in accordance with management's general or specific authorization.

(ii) Transactions and other events are promptly recorded at correct amounts.

(iii) Transactions should be classified in appropriate accounts and in the appropriate period to which it relates.

(iv) Transaction should be recorded in a manner so as to facilitate preparation of financial statements in accordance with applicable accounting standards, other accounting policies and practices and relevant statutory requirements.

(v) Recording of transaction should facilitate maintaining accountability for assets

(vi) Assets and records are required to be protected from unauthorized access, use or disposition.

(vii) Records of assets such as sufficient description of the assets (to facilitate identification) its location should also be maintained so that the assets could be physically verified periodically.

For prompt, accurate, complete and appropriate recording of accounting transaction, several procedures are often established by the management. The assurance that transactions have been properly recorded can also be obtained through a comparison of records with an independent source of information which provides an indication of the execution of the relevant transactions.

Accountability and Safeguarding of Assets - The process of accountability of assets commences from acquisitions of assets its use and final disposal. Safeguarding of assets requires appropriate maintenance of records, their periodic reconciliation with the related assets. Assets like cash, inventories, investment scrips require frequent physical verification with book records. The frequency of reconciliation would differ for different assets depending upon their nature and amount. Assets which are considered sensitive or susceptible to error need to be reconcile more frequently than others. For proper safeguarding of assets, only authorized personnel should be given access to such asset. This not only means physical access but also exercising control over processing of documents relating to authorization for use and disposal of assets. It is essential to have effective controls over physical custody of cash, inventories, investments and other fixed assets. In some cases, as per requirement, special procedures regarding physical custody of assets may have to be designed by the management.

Independent Checks - Independent verification of the control systems, designed and implemented by the management, involves periodic or regular review by independent persons to ascertain whether the control procedures are operating effectively or not. Such process may be carried out by specially assigned staff under the banner of external audit.

3.3 Components of Internal Controls

The overall systems of inter control comprises of Administrative Control and Accounting Controls, Internal Checks and Internal Audit are important constituents of Accounting Controls.

Internal Check System - Internal check system implies organization of the overall system of book-keeping and arrangement of Staff duties in such a way that no one person can carry

through a transaction and record every aspect thereof. It is a part of overall control system and operates basically as a built-in-device as far as organization and job-allocation aspects of the controls are concerned. The system provides existence of checks on the day to day transactions which operate continuously as part of the routine system whereby the work of each person is either proved independently or is made complimentary to the work of another. The following are the objectives of the internal check system:

(i) To detect error and frauds with ease.

(ii) To avoid and minimize the possibility of commission of errors and fraud by any staff.

(iii) To increase the efficiency of the staff working within the organization.

(iv) To locate the responsibility area or the stages where actual fraud and error occurs.

(v) To protect the integrity of the business by ensuring that accounts are always subject to proper scrutiny and check.

(vi) To prevent and avoid the misappropriation or embezzlement of cash and falsification of accounts.

The effectiveness of an efficient system of internal check depends on the following considerations -

(i) Clarity of Responsibility - The responsibility of different persons engaged in various operations of business transactions should be properly identified. A well integrated organizational chart depicting the names of responsible persons associated with specific functions may help to fix up responsibility.

(ii) Division of Work - The segregation of work should be made in such a manner that the free flow of work is not interrupted and also helps to determine that the work of one person is complementary to the other. Then, it is suggested that rotation of different employees through various components of job should be effectively implemented.

(iii) Standardization - The entire process of accounting should be standardized by creating suitable policies commensurate with the nature of the business, so as to strengthen the system of internal check.

(iv) Appraisal - Periodic review should be made of the chain of operations and work flow. Such process may be carried out by preparing an audit flow chart.

The general condition pertaining to the internal check system may be summarized as under -

(i) no single person should have complete control over any important aspect of the business operation. Every employee's action should come under the review of another person.

(ii) Staff duties should be rotated from time to time so that members do not perform the same function for a considerable length of time.

(iii) Every member of the staff should be encouraged to go on leave at least once a year.

(iv) Persons having physical custody of assets must not be permitted to have access to the books of accounts.

(v) There should exist an accounting control in respect of each class of assets, in addition, there should be periodical inspection so as to establish their physical condition.

(vi) Mechanical devices should be used, where ever practicable to prevent loss or misappropriation of cash.

(vii) Budgetary control should be exercised and wide deviations observed should be reconciled.

(viii) For stock taking, at the close of the year, trading activities should, if possible be suspended, and it should be done by staff belonging to several sections of the organization.

(ix) The financial and administrative powers should be distributed very judiciously among different officers and the manner in which those are actually exercised should be reviewed periodically.

(x) Procedures should be laid down for periodical verification and testing of different sections of accounting records to ensure that they are accurate.

The scope of statutory audit is limited by both time and cost. Therefore, it is increasingly being recognized that for an audit to be effective especially in case of large organization, the existence of a system of internal check is essential.

Internal Audit - Internal audit may be defined as, an independent appraisal function established within an organization to examine and evaluate its activities as a service to the organization. The scope of the internal audit is determined by the management. Internal auditing includes a series of processes and techniques through which an organizations own employees ascertain for the management, by means of on-the-job observation, whether established management controls are adequate, and are effectively maintained; records and reports financial, accounting and otherwise reflect actual operation and results accurately and properly; each division, department or other units are carrying out the plans, policies and procedures for which they are responsible.

For a detailed discussion on internal audit refer to Chapter 19.

3.4 Review of the System of Internal Controls

The review of the internal control system enables the auditor -

(i) to formulate his opinion as to the reliance he may place on the system itself i.e. whether the system is such as would enable the management to produce a true and fair set of financial statements; and

(ii) to locate the areas of weakness in the system so that the audit programme and the nature, timing and extent of substantive and compliance audit procedures can be adjusted to meet the situation. For example, if the auditor is not satisfied with the control system as regards debtors, he may decide to have a wider coverage for confirmation of debtor' balances. Normally, investments and cash are physically verified at the end of the period and this routine is known to the client and his employees. In case the auditor

comes across a weakness in the control either he may provide in the programme for a surprise cash count or investment verification on a day preceding or succeeding the routine verification. In such a case, a surprise check will be more useful if it is undertaken after the routine verification is over. Similarly if he is of the view that because of weak controls the possibility of wrong billing to customers exists, be may extend the programme for comparison of the invoices with the forwarding notes and for checking of the extensions and castings of the invoices.

Deciding the point of time appropriate for undertaking the review of the internal controls is a matter for individual judgement of the auditor. This decision can be taken on a consideration of the size and complexity of the client's operations. If the auditor, because of his continuing relationship with his client, is already aware of the features and efficacy of internal controls, he may just review the changes that have taken place in the intervening period because of changes in the operations of the client. However, a comprehensive review in such cases must be made at an interval of, say, 3 years. Ordinarily, the review of internal controls should be undertaken as a distinct phase of audit before finalisation of the audit programme. However, if the size of operations is rather small, the review can be undertaken in conjunction with other audit procedures and the programmes can be adjusted for any extension or elimination of checking.

When the auditor finds inadequacies or weaknesses in the internal control system, he should advise his client about such inadequacies and weaknesses and the consequences that may follow. It should be the duty of the auditor to see, in the course of his audit, how far the inadequacies and weaknesses have been removed. He will take this into account in preparing his audit report. It is a useful practice to note the following after each function, set out in the audit programme -

(i) Any change in the system of internal control from that record in the appropriate section of the internal control questionnaire.

(ii) Any further weakness noted in the internal control.

(iii) Any instance where the prescribed system or procedure has not been followed.

These should be considered in deciding whether any further modification in the audit programme is called for. Also, these should be communicated to the client and confirmation should be sought as regards changes in the system.

The review of internal control consists mainly of enquiries of personnel at various organisational levels within the enterprise together with reference to documentation such as procedures, manuals, job description and flow-charts, to gain knowledge about the controls which the auditor has identified as significant to his audit. The auditor may trace a few transactions through the accounting system to assist in understanding that system and it is related to internal controls. The auditor's preliminary evaluation of internal controls should be made on the assumption that the controls operate generally as described and that they function effectively throughout the period of intended reliance. The purpose of the preliminary evaluation is to identify the particular controls on which the auditor still intends to rely and to test through compliance procedures. Different techniques are used to record information

relating to an internal control system. Selection of a particular technique is a matter for the auditor's judgement.

3.5 Methods of Recording

The following are the methods of recording:

3.5.1 Questionnaire: Because of the widespread experience that auditors possess about the business operations in general and the knowledge about the appropriate control, most of the auditing firms have developed their own standardised internal control questionnaire on a generally applicable basis. In developing the standard questionnaire, endeavour is made to make it as wide as possible so that all situations, generally found, are included therein but all of these may not be applicable in a particular case. A questionnaire is a set of questions framed in an organised manner, about each functional area, which has as purpose the evaluation of the effectiveness of control and detection of its weakness if any. A questionnaire usually consists of several separate sections devoted to areas such as purchases, sales, debtors, creditors, wages, etc. The questionnaire is intended to be filled by the company executives who are in charge of the various areas. However, this poses some practical difficulties. The questionnaire is to travel from executives and, therefore, it may take a pretty long time to be filled; also the questions may not be readily intelligible to busy executives and there is a possibility of the questionnaire being misplaced while travelling from one table to another. Having regard to these difficulties, it is now almost an accepted practice that the auditor (or his representative) arranges meetings with the executives concerned and gets the answers filled by each executive. Sometimes, the auditor himself may be required to fill the answers. In such a case, he should ensure that the concerned executive has initiated the answers as a token of his agreement therewith.

Questions are so framed as generally to dispense with the requirement of a detailed answer to each question. For this purpose, often one general question is broken down into a number of questions and sub-questions to enable the executive to provide a just 'Yes', 'No' or 'Not applicable' form of reply. Questions are also framed in such a manner that generally a "No" answer will effect weakness in the control system. This requires giving a positive power to the question, keeping in view what the proper control should be. Consider the question 'Are all receipts recorded promptly and deposited in bank daily? If the answer to this is 'Yes', it fits with the plan of good internal control. But if it is 'No' it indicates weakness in the system in as much as the moneys received may not be recorded and may be defalcated because the cashier has continued control over the amount for an uncertain period. However, this should not be taken as an unbreakable rule. Questions may be framed also when a 'Yes' answer would indicate weakness. The only thing that should be borne in mind is that the scheme of questions should be consistent, sequential, logical, and if possible corroborative. Wherever it is necessary, slightly detailed answers also may be asked for to bring clarity to the matter. In the use of standardized internal control questionnaire, certain basic assumptions about elements of good control are taken into account. These are -

(i) Certain procedures in general used by most business concerns are essential in achieving

reliable internal control. This is a time-tested assumption. Deposit into bank of the entire receipts of a day or daily balancing of the cash book and ledgers or periodic reconciliation with the control accounts are examples of widely used practices which are considered good internal control practices. Besides, basic operations giving rise to these practices exist in all businesses irrespective of their nature.

(ii) Organisations are such that permit an extensive division of duties and responsibilities. The larger the organisation, the greater is the scope of such division.

(iii) Employees concerned with accounting function are not assigned any custodial function.

(iv) No single person is thrust with the responsibility of completing a transaction all by himself.

(v) There should always be evidence to identify the person who has done the work whether involving authorisation, implementation or checking.

(vi) The work performed by each one is expected to come under review of another in the usual course of routine.

(vii) There is proper documentation and recording of the transactions.

The questionnaire serves the purpose of a record so far as the auditor is concerned about the state of internal control as given to him officially. A question naturally arises as to whether it is necessary to issue questionnaire for every year of the auditor's engagement. For the first year of engagements issue of questionnaire is necessary. For subsequent years, the auditor, instead of issuing a questionnaire again, may request the client to confirm whether any change in the nature and scope of business has taken place that necessitated a corresponding change in the control system, or whether, even without a change in the nature and scope of business, the control system has undergone a change. If there has been a change, the auditor should take note of its and enter appropriate comments on the relevant part of the questionnaire. However, it would be a good practice in the case of continuing engagements to issue a questionnaire irrespective of any change, say, every third year. This will obviate unnecessary trouble of filling the answers every time and to that extent the client's and the auditor's own time will be saved. The rationale for issuance of a questionnaire every three years, in the case of even no change, lies in altering the client as regards unnoticed and unspectacular changes that might have taken place during the intervening period; also this will make the client more control-conscious. Questionnaires can be prepared for various aspects of the internal control system.

3.5.2 Check List: It is a series of instructions or questions on internal control which the auditor must follow or answer. When a particular instruction is carried out, the auditor initials the space opposite the instruction. If it is in the form of a question the answer generally 'Yes', 'No' or 'Not Applicable' is entered opposite the question. A check list is more in the nature of a reminder to the auditor about the matters to be checked for testing the internal control system. While a questionnaire is basically a set of questions put to the client, a check list which may

be in a form of instructions, questions or just points to be checked may be meant for the auditor's own staff it is a set of instructions or points; it may be meant for the client if it is in the form of questions. The question form of check list may even be meant for the auditor's own staff. For example, questions in the check list may be formed in the following manner (this is an illustrative set of questions to be answered by the audit staff).

1. Have you checked that the cashier

(i) is not responsible for opening the incoming mails;

(ii) does not authorise any of the ledgers;

(iii) does not authorise any expenditure or receipt;

(iv) does not sign cheques;

(v) takes his annual leave regularly;

(vi) inks and balances the cash book everyday;

(vii) verifies physical cash balance with the book figure daily at the end of the day;

(viii) prepares monthly bank reconciliation statement;

(ix) holds no other funds or investment;

(x) holds no unnecessary balance in hand;

(xi) does not pay money without looking into compliance with proper procedure and due authorisation; and

(xii) has tendered proper security or has executed a fidelity bond?

When the check list is in question form it is hardly different from a questionnaire. However, generally questionnaire is a popular medium for the evaluation of the internal control system.

The basic distinction between internal control questionnaire and check list are as under:

1. The ICQ incorporates a large number of detailed questions but the check list generally contains questions relating to the main control objective with the area under review.
2. ICQ, the weaknesses are highlighted by the 'Yes' while in the check list, it is indicated by 'No'.
3. The significance of 'No' in an ICQ does indicate a weakness but the significance of that weakness is not revealed automatically. However, in the check list, a specific statement is required where an apparent weakness may prove to be material in relation to the accounts as a whole.

3.5.3 Flow chart: The flow charting technique can also be resorted to for evaluation of the internal control system. It is a graphic presentation of internal controls in the organisation and is normally drawn up to show the controls in each section or sub-section. As distinct from a narrative form, it provides the most concise and comprehensive way for reviewing the internal controls and the evaluator's findings. In a flow chart, narratives, though cannot perhaps be

totally banished are reduced to the minimum and by that process, it can successfully bring the whole control structure, specially the essential parts thereof, in a condensed but wholly meaningful manner. It gives a bird's eye view of the system and is drawn up as a result of the auditor's review thereof. It should, however, not be understood that details are not reflected in a flow chart. Every detail relevant from the control point of view and the details about how an operation is performed can be included in the flow chart. Essentially a flow chart is a diagram full with lines and symbols and, if judicious use of them can be made, it is probably the most effective way of presenting the state of internal controls in the client's organisation. A properly drawn up flow chart can provide a neat visual picture of the whole activities of the section or department involving flow of documents and activities. More specifically it can show -

(i) at what point a document is raised internally or received from external sources;

(ii) the number of copies in which a document is raised or received;

(iii) the intermediate stages set sequentially through which the document and the activity pass;

(iv) distribution of the documents to various sections, department or operations;

(v) checking authorisation and matching at relevant stages;

(vi) filing of the documents; and

(vii) final disposal by sending out or destruction.

As a matter of fact a very sound knowledge of internal control requirements is imperative for, adopting flow-charting technique for evaluation of internal controls; also it demands a highly analytical mind to be able to see clearly the inter division of a job and the appropriate control at relevant points.

It has been stated earlier that flow charts should be made section-wise or department-wise. The suggestion has been made to ensure readability and intelligibility of the flow charts.

Drawing of a flow chart - A flow chart is normally a horizontal one in which documents and activities are shown to flow horizontally from section to section and the concerned sections are shown as the vertical column heads; in appropriate cases an individual also may be shown as the vertical column head. Care should be taken to see that the first column head is devoted to the section or the individual wherefrom a transaction originates and the placements of other column heads should be in the order of the actual flow of the transaction. It has been started earlier that a flow chart is a symbolic representation the flow of activity and related documents through the section from origin to conclusion. These can be sales, purchases, wages, production, etc. Each one of the main functions is to be linked with related functions for making a complete course. Purchase is to be linked with sundry creditors and payments; sales with sundry debtors and collections. By this process, a flow chart will become self contained, complete and meaningful for evaluation of internal controls.

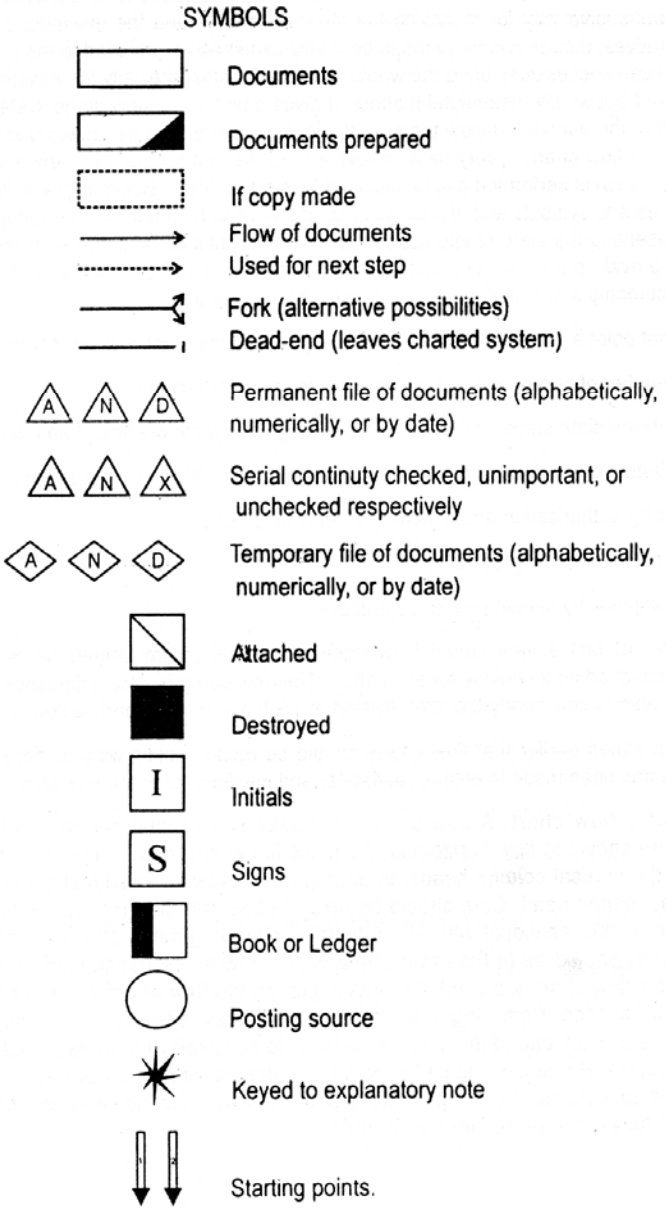

Generally, a questionnaire is also enclosed with a flow chart, incorporating questions, the answers to which are to be looked into from the flow chart. This is an evaluation of the control system through the process of flow charting. The internal control questionnaire contains questions; answers are available in the flow chart and they will reveal weakness, if any, in the system. In fact, the questionnaire is a guide for the study of a control system through flow charts.

We may examine the flow charting techniques for evaluation of internal controls on the sales and debtors function. Let us assume that these are -

1. Order receiving function.
2. Dispatch function.
3. Billing function.
4. Accounting in the debtors' ledger.
5. Main accounting function.
6. Inventory recording function.

All these functions are carried out in distinct sections. As regards the Order Receiving Section, let us further assume that the section receives orders:

(i) through mail;

(ii) by telephone; and

(iii) through the company's salesmen.

Basing the receipts of orders of customers, the section raises internal "Sales advices". These sales advices are consecutively numbered (by reference to the last number on the order book) and entered in the order book with the consecutive number, date, the party and other relevant details. The orders received from customers are temporarily filed in the alphabetical order. The sales advices are prepared in sets of four with a noting for the customer's sales-tax status. All the four copies are sent to the dispatch section. The dispatch section, after dispatch of the goods, sends back to the Order receiving Section the last copy of the sales advice after entering thereon the date of dispatch and the quantity despatched. Upon receipt of the last copy, the Order receiving Section enters the date of dispatch and the quantity despatched in the order book. If the quantity despatched is fulfillment of the quantity ordered, the last copy of the sales invoices is annexed to customer's order and filed in the customer's file. If, however, the order is only partly executed, the copy of the sales advice is kept in a temporary file in numerical order. Periodically this file is checked to determine the unfulfilled orders and, if stock is then available, the Section again initiates fresh sales advices in respect of the unfulfilled part and all the processes, as in the case of original, are repeated. The last copy of the original set is annexed to the customer's order and kept in the customer's file.

The salesmen use the same advice form as is being used by the order receiving section.

For the purpose of drawing a flow chart to incorporate the above narration it is useful to know -

1. the point for originating the flow of transaction.
2. the documents, internal and external, and the flow of the transaction, number of copies, distribution flow and the details.
3. the books, if any, maintained and the details recorded there in and the source or sources for the details.
4. that there exists an alternative possibility.

The flow chart for the above may be as under -

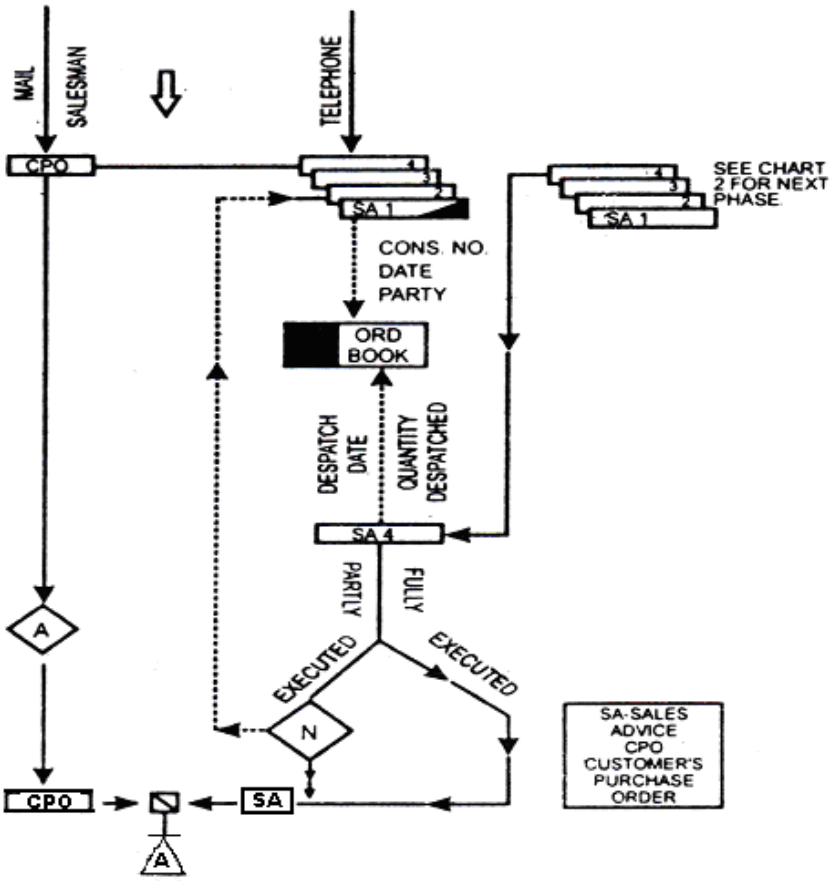

CHART 1

We can extend the activity flow now to the dispatch section which is the logical second stage of operation. The work and procedure content of the dispatch section is assumed to be as follows:

After the receipt of the sales advices in sets of four, the dispatch section arranges dispatch of materials and put the date of dispatch and the quantities despatched; the head of the Section initials the advices. The last copy of the advice is sent back to the Order Receiving Section. The first copy is sent as a packing slip with the goods, the second copy goes to the Billing Department and the third copy accompanies the goods when delivered to the buyer and, obtaining the buyer's acknowledgement of the receipt of the goods therein, is received back and filed date-wise. In case of goods not directly delivered to the buyers, i.e., when the goods are sent either by rail, road or water transport, the copy constitutes the basis for raising the relevant forwarding note on the basis of which R.R. etc., can be prepared.

The flow chart for the dispatch section may be as follows -

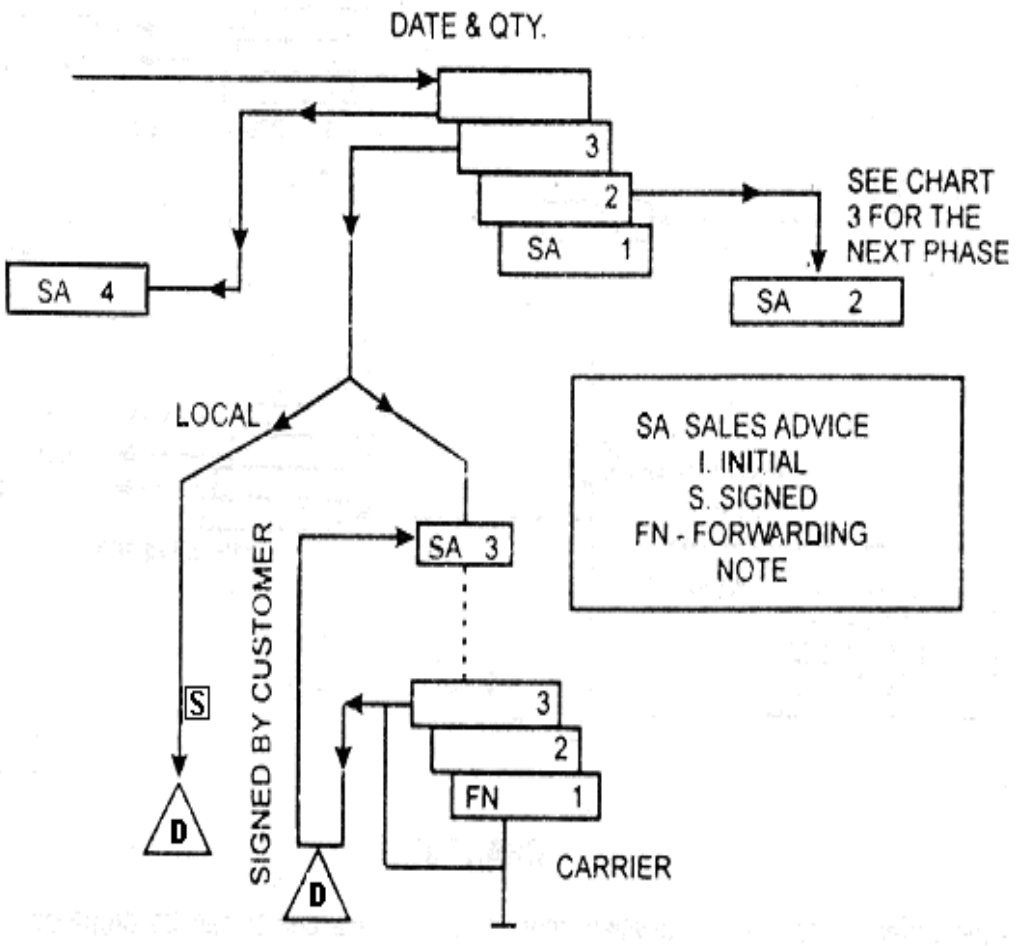

CHART 2

This flow is taken to the Billing Section. The Section generally accumulates the second copy of the Sales Advice for two or three days and prepares sales invoices in sets of four. The pricing of the sales invoice is done by reference to the company's current price list or the catalogue. The number of the sales advice is entered on the corresponding invoice which is pre-numbered, also, the number of the invoice is recorded on the copy of the sales advice which is then filed alphabetically. The first copy of the invoice is sent to the customer while the second, third and fourth copies are respectively sent to the sundry debtors' ledger clerk, the Stock Section and the Accounts Section. The Billing Section also is responsible for raising credit notes on the basis of documents received. Credit notes are also prepared in sets of four and are distributed in exactly the same way as invoices. The stocks of invoice and the credit note forms remain in the Billing Section.

The Flow Chart for this Section is given below -

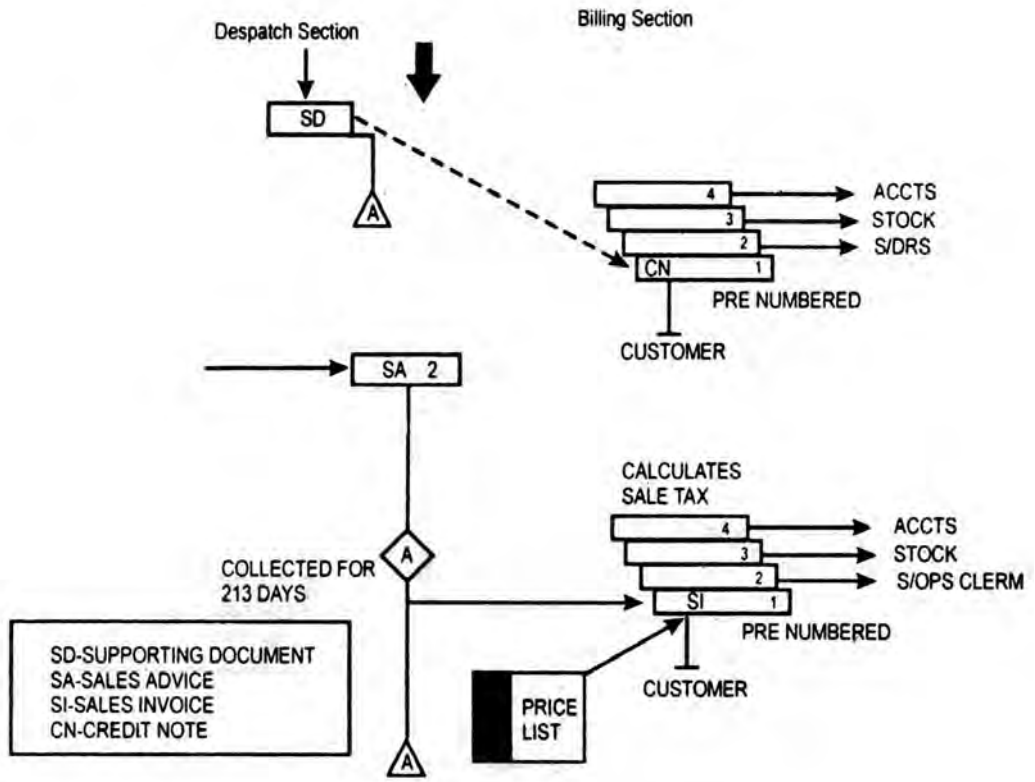

CHART 3

Now, in the order of the flow of activities, more sectional flow charts can be prepared to cover the activities in the Accounts Section and the Stock Section and they together, when sequentially assembled, will constitute the complete flow chart for the sales transactions and sundry debtor's recordings.

(These flow charts have been prepared on the basis of the approach and the symbols used in the book "Analytical Auditing" by Skinner and Anderson. Students who desire to study the subject of preparation of flow charts further may refer to Chapter 4 of that book.)

It is now left for us to see how these flow charts reveal the state of internal control. A close look into flow charts will show the following:

(i) The advices are sent by salesmen; though prepared on the same sales advice form as is prepared in the section, there is no check that all the advices sent by salesmen have been received. This may entail loss of business because of non-receipt of sales advice. (Refer to the flow chart for the Order Receiving Section).

(ii) The raising of sales advises on the basis of telephonic orders, irrespective of the party's standing and record of performance is risky from the business point of view. (Refer to the flow chart for the Order Receiving Section).

(iii) There is no system of prior credit sanction to the parties; in consequence, there may be dispatch of goods to bad credit risks. (Refer to the flow chart for the Dispatch Section).

(iv) There is no check that all the second copies of the sales advices sent by the Dispatch Section have been received by the Billing Section. The possibility of dispatch not being, billed exists, (Refer to the flow chart for the Dispatch as well as the Billing Section.

(v) There is no check in respect of pricing, extension and addition on the invoice or the credit notes. This may result in loss of revenue for wrong pricing or wrong calculation. (Refer to the flow chart for Billing Section).

(vi) It is not clear whether the supporting documents are adequate for authorising the issue of credit notes where there is a need for a greater caution. (Refer to the flow chart for Billing Section).

So far we have seen the points of weaknesses that are evident from these flow charts. For a clearer understanding of the flow chart as a medium for evaluating internal controls, the following further points may be useful:

(a) There exists proper numerical control over orders booked (except the case for the salesmen's orders).

(b) There is a permanent and continuous record of the orders booked in the form of order book.

(c) There is a definite basis for raising sales advices.

(d) The order book record is always kept complete by entering the information about the execution of the order and this keeps the information about the pending orders ready at any moment.

(e) Partly executed orders are reviewed from time to time so that as soon as goods are available, the same may be despatched to customers.

(f) The customer's purchase order and the related sales advice are matched and kept together in the customer's file.

(g) The sales advices are initialed by the Dispatch Section head as token of his having satisfied himself about the correctness of the entries as regards the quantity despatched and the date of dispatch.

(h) Record of actual direct delivery is maintained through the copy of the sales advice bearing the customer's, acknowledgement of his having received the goods. Similarly, the record of out station deliveries is kept in the copy of the forwarding note annexed to the sales advice copy.

(i) Documents have as many copies as are necessary for ensuring proper flow and proper control. There is neither wastage through unnecessary copies nor any hold up because

of inadequacy of copies.

(j) There are supporting documents for raising invoices and credit notes.

(k) The distribution of invoices and credit notes is such as would enable the recording of billing at the relevant centres independent of each other.

(l) There is control over the number of invoices and credit notes by pre-numbering.

Thus, by flow charting has an auditor can very clearly see the inter- relationships of the activities and flows and how they are integrated from stage to stage. However, the auditor has to be careful about the readability and intelligibility of the chart. Identification of all individual functions in a section is also highly relevant for preparation of the flow chart. The smaller the segment, the better is the possibility of quick comprehension. Naturally, the auditor should try to see each section as the natural assembly of distinct and identified components.

3.6 Internal Control and Risk Assessment

The auditor should obtain an understanding of the control environment sufficient to assess management's attitudes, awareness and actions regarding internal controls and their importance in the entity. Such an understanding would also help the auditor to make a preliminary assessment of the adequacy of the accounting and internal control systems as a basis for the preparation of the financial statements, and of the likely nature, timing and extent of audit procedures.

The auditor should obtain an understanding of the control procedures sufficient to develop the audit plan. In obtaining this understanding, the auditor would consider knowledge about the presence or absence of control procedures obtained from the understanding of the control environment and accounting system in determining whether any additional understanding of control procedures is necessary. Because control procedures are integrated with the control environment and the accounting system, as the auditor obtains an understanding of the control environment and the accounting system, some knowledge about control procedures is also likely to be obtained, for example, in obtaining an understanding of the accounting system pertaining to cash, the auditor ordinarily becomes aware of whether bank accounts are reconciled regularly. Ordinarily, development of the overall audit plan does not require an understanding of control procedures for every financial statement assertion in each account balance and transaction class.

3.6.1 Control Risk: Preliminary Assessment of Control Risk - After obtaining an understanding of the accounting system and internal control system, the auditor should make a preliminary assessment of control risk, at the assertion level, for each material account balance or class of transactions.

The preliminary assessment of control risk is the process of evaluating the likely effectiveness of an entity's accounting and internal control systems in preventing or detecting and correcting material misstatements. The preliminary assessment of control risk is based on the assumption that the controls operate generally as described and that they operate effectively throughout the period of intended reliance. There will always be some control risk because of

the inherent limitations of any accounting and internal control system.

The auditor ordinarily assesses control risk at a high level for some or all assertions when:

(a) the entity's accounting and internal control systems are not effective; or

(b) evaluating the effectiveness of the entity's accounting and internal control systems would not be efficient.

In the above circumstances, the auditor would obtain sufficient appropriate audit evidence from substantive procedures and from any audit work carried out in the preparation of financial statements.

The preliminary assessment of control risk for a financial statement assertion should be high unless the auditor:

(a) is able to identify internal controls relevant to the assertion which are likely to prevent or detect and correct a material misstatement; and

(b) plans to perform tests of control to support the assessment.

Documentation of Understanding and Assessment of Control Risk - The auditor should document in the audit working papers:

(a) the understanding obtained of the entity's accounting and internal control systems; and

(b) the assessment of control risk.

When control risk is assessed at less than high, the auditor would also document the basis for the conclusions.

Different techniques may be used to document information relating to accounting and internal control systems. Selection of a particular technique is a matter for the auditor's judgement. Common techniques, used alone or in combination, are narrative descriptions, questionnaires, check lists and flow charts. The form and extent of this documentation is influenced by the size and complexity of the entity and the nature of the entity's accounting and internal control systems. Generally, the more complex the entity's accounting and internal control systems and the more extensive the auditor's procedures, the more extensive the auditor's documentation will need to be.

Tests of Control - Tests of control are performed to obtain audit evidence about the effectiveness of the:

(a) design of the accounting and internal control systems, that is, whether they are suitably designed to prevent or detect and correct material misstatements; and

(b) operation of the internal controls throughout the period.

Tests of control include tests of elements of the control environment where strengths in the control environment are used by auditors to reduce control risk.

Some of the procedures performed to obtain the understanding of the accounting and internal control systems may not have been specifically planned as tests of control but may provide audit evidence about the effectiveness of the design and operation of internal controls relevant

to certain assertions and, consequently, serve as tests of control. For example, in obtaining the understanding of the accounting and internal control systems pertaining to cash, the auditor may have obtained audit evidence about the effectiveness of the bank reconciliation process through inquiry and observation.

When the auditor concludes that procedures performed to obtain the understanding of the accounting and internal control systems also provide audit evidence about the suitability of design and operating effectiveness of policies and procedures relevant to a particular financial statement assertion, the auditor may use that audit evidence, provided it is sufficient to support a control risk assessment at less than a high level.

Tests of control may include:

- Inspection of documents supporting transactions and other events to gain audit evidence that internal controls have operated properly, for example, verifying that a transaction has been authorised.
- Inquiries about, and observation of, internal controls which leave no audit trail, for example, determining who actually performs each function and not merely who is supposed to perform it.
- Re-performance of internal controls, for example, reconciliation of bank accounts, to ensure they were correctly performed by the entity.
- Testing of internal control operating on specific computerised applications or over the overall information technology function, for example, access or program change controls.

The auditor should obtain audit evidence through tests of control to support any assessment of control risk which is less than high. The lower the assessment of control risk, the more evidence the auditor should obtain that accounting and internal control systems are suitably designed and operating effectively.

When obtaining audit evidence about the effective operation of internal controls, the auditor considers how they were applied, the consistency with which they were applied during the period and by whom they were applied. The concept of effective operation recognises that some deviations may have occurred. Deviations from prescribed controls may be caused by such factors as changes in key personnel, significant seasonal fluctuations in volume of transactions and human error. When deviations are detected the auditor makes specific inquiries regarding these matters, particularly, the timing of staff changes in key internal control functions. The auditor then ensures that the tests of control appropriately cover such a period of change or fluctuation.

In a computer information systems environment, the objectives of tests of control do not change from those in a manual environment; however, some audit procedures may change. The auditor may find it necessary, or may prefer, to use computer-assisted audit techniques. The use of such techniques, for example, file interrogation tools or audit test data, may be appropriate when the accounting and internal control systems provide no visible evidence documenting the performance of internal controls which are programmed into a computerised accounting system.

Based on the results of the tests of control, the auditor should evaluate whether the internal controls are designed and operating as contemplated in the preliminary assessment of control risk. The evaluation of deviations may result in the auditor concluding that the assessed level of control risk needs to be revised. In such cases, the auditor would modify the nature, timing and extent of planned substantive procedures.

Quality and Timeliness of Audit Evidence

Certain types of audit evidence obtained by the auditor are more reliable than others. Ordinarily, the auditor's observation provides more reliable audit evidence than merely making inquiries, for example, the auditor might obtain audit evidence about the proper segregation of duties by observing the individual who applies a control procedure or by making inquiries of appropriate personnel. However, audit evidence obtained by some tests of control, such as observation, pertains only to the point in time at which the procedure was applied. The auditor may decide, therefore, to supplement these procedures with other tests of control capable of providing audit evidence about other periods of time.

In determining the appropriate audit evidence to support a conclusion about control risk, the auditor may consider the audit evidence obtained in prior audits. In a continuing engagement, the auditor will be aware of the accounting and internal control systems through work carried out previously but will need to update the knowledge gained and consider the need to obtain further audit evidence of any changes in control. Before relying on procedures performed in prior audits, the auditor should obtain audit evidence which supports this reliance. The auditor would obtain audit evidence as to the nature, timing and extent of any changes in the entity's accounting and internal control systems since such procedures were performed and assess their impact on the auditor's intended reliance. The longer the time elapsed since the performance of such procedures the less assurance that may result.

The auditor should consider whether the internal controls were in use throughout the period. If substantially different controls were used at different times during the period, the auditor would consider each separately. A breakdown in internal controls for a specific portion of the period requires separate consideration of the nature, timing and extent of the audit procedures to be applied to the transactions and other events of that period.

The auditor may decide to perform some tests of control during an interim visit in advance of the period end. However, the auditor cannot rely on the results of such tests without considering the need to obtain further audit evidence relating to the remainder of the period. Factors to be considered include:

- The results of the interim tests.
- The length of the remaining period.
- Whether any changes have occurred in the accounting and internal control systems during the remaining period.
- The nature and amount of the transactions and other events and the balances involved.
- The control environment, especially supervisory controls.

- The nature, timing and extent of substantive procedures which the auditor plans to carry out.

Final Assessment of Control Risk

Before the conclusion of the audit, based on the results of substantive procedures and other audit evidence obtained by the auditor, the auditor should consider whether the assessment of control risk is confirmed. In case of deviations from the prescribed accounting and internal control systems, the auditor would make specific inquiries to consider their implications. Where, on the basis of such inquiries, the auditor concludes that the deviations are such that the preliminary assessment of control risk is not supported, he would amend the same unless the audit evidence obtained from other tests of control supports that assessment. Where the auditor concludes that the assessed level of control risk needs to be revised, he would modify the nature, timing and extent of his planned substantive procedures.

3.6.2 Relationship between the Assessments of Inherent and Control Risk: Management often reacts to inherent risk situations by designing accounting and internal control systems to prevent or detect and correct misstatements and therefore, in many cases, inherent risk and control risk are highly interrelated. In such situations, if the auditor attempts to assess inherent and control risks separately, there is a possibility of inappropriate risk assessment. As a result, audit risk may be more appropriately determined in such situations by making a combined assessment.

3.6.3 Detection Risk: The level of detection risk relates directly to the auditor's substantive procedures. The auditor's control risk assessment, together with the inherent risk assessment, influences the nature, timing and extent of substantive procedures to be performed to reduce detection risk, and therefore audit risk, to an acceptably low level. Some detection risk would always be present even if an auditor was to examine 100 percent of the account balances or class of transactions because, for example, most audit evidence is persuasive rather than conclusive.

The auditor should consider the assessed levels of inherent and control risks in determining the nature, timing and extent of substantive procedures required to reduce audit risk to an acceptably low level. In this regard the auditor would consider:

(a) the nature of substantive procedures, for example, using tests directed toward independent parties outside the entity rather than tests directed toward parties or documentation within the entity, or using tests of details for a particular audit objective in addition to analytical procedures;

(b) the timing of substantive procedures, for example, performing them at period end rather than at an earlier date; and

(c) the extent of substantive procedures, for example, using a larger sample size.

There is an inverse relationship between detection risk and the combined level of inherent and control risks. For example, when inherent and control risks are high, acceptable detection risk needs to be low to reduce audit risk to an acceptably low level. On the other hand, when inherent and control risks are low, an auditor can accept a higher detection risk and still reduce audit risk to an acceptably low level.

While tests of control and substantive procedures are distinguishable as to their purpose, the results of either type of procedure may contribute to the purpose of the other. Misstatements discovered in conducting substantive procedures may cause the auditor to modify the previous assessment of control risk. .

The assessed levels of inherent and control risks cannot be sufficiently low to eliminate the need for the auditor to perform any substantive procedures. Regardless of the assessed levels of inherent and control risks, the auditor should perform some substantive procedures for material account balances and classes of transactions.

The auditor's assessment of the components of audit risk may change during the course of an audit, for example, information may come to the auditor's attention when performing substantive procedures that differs significantly from the information on which the auditor originally assessed inherent and control risks. In such cases, the auditor would modify the planned substantive procedures based on a revision of the assessed levels of inherent and control risks.

The higher the assessment of inherent and control risks, the more audit evidence the auditor should obtain from the performance of substantive procedures. When both inherent and control risks are assessed as high, the auditor needs to consider whether substantive procedures can provide sufficient appropriate audit evidence to reduce detection risk, and therefore audit risk, to an acceptably low level. When the auditor determines that detection risk regarding a financial statement assertion for a material account balance or class of transactions cannot be reduced to an acceptable level, the auditor should express a qualified opinion or a disclaimer of opinion as may be appropriate.

Mathematically Audit Risk (AR) can be expressed as a product of Inherent Risk (IR), Control Risk (CR) and Detection Risk (DR), i.e. AR = IR x CR x DR

It should be noted that:

1. the combined level of Inherent Risk and Control Risk is inversely related with Detection Risk, and
2. Audit Materiality is also inversely related with audit risk.

   The relationship between different components of audit risks is given in the following table:

		Auditors' assessment of control risk		
		High	Medium	Low
Auditors' assessment of inherent risk	High	Lowest	Lower	Medium
	Medium	Lower	Medium	Higher
	Low	Medium	Higher	Highest

The shaded areas in this table relate to detection risk.

3.7 Internal Control in Small Business Enterprises

The auditor needs to obtain the same degree of assurance in order to give an unqualified opinion on the financial statements of both small and large entities. However many controls which would be relevant to large entities are not practical in small business. For example, in a small business, accounting procedures may be performed by a few persons. These persons may have both operating and custodial responsibilities and segregation of functions may be missing or severely limited. Inadequate segregation of duties may, in some cases, be offset by supervisory controls exercised by the owner. This supervisory function by the owner becomes possible because of the fact that he has direct personal knowledge of the business and involvement in the business transactions. In circumstances where segregation of duties is limited and the evidence of supervisory controls is lacking the evidence necessary to support the auditor's opinion on the financial information may have to be obtained largely through substantive procedures.

3.8 Reporting to Clients on Internal Control Weaknesses

During the course of audit work, the audit may notice material weaknesses in the internal control system. Material weaknesses are defined as absence of adequate controls on flow of transactions that increases the possibility of errors and frauds in the financial statements of the entity. For example, if monthly age-wise analysis of debtors is not performed then it may result in inadequate provisioning of bad debts for the fiscal year under audit.

The auditor should communicate such material weaknesses to the management or the audit committee, if any, on a timely basis. This communication should be, preferably, in writing through a letter of weakness or management letter. Important points with regard to such a letter are as follows:

(a) The letter lists down the area of weaknesses in the system and offers suggestions for improvement.

(b) It should clearly indicate that it discusses only weaknesses which have come to the attention of the auditor as a result of his audit and that his examination has not been designed to determine the adequacy of internal control for management.

(c) This letter serves as a valuable reference document for management for the purpose of revising the system and insisting on its strict implementation.

(d) The letter may also serve to minimize legal liability in the event of a major defalcation or other loss resulting from a weakness in internal control.

It should be appreciated that by writing a letter to the management about the weaknesses in the system, the auditor is not absolved from his duty to report the shortcomings in the accounts by way of qualification where the defects have not been corrected to the auditor's satisfaction weighing the materiality of weaknesses and their impact, if considered necessary.

The practice of the issue of letter of weaknesses has a great merit in relieving the auditor from liability in case serious frauds or losses have occurred, which probably would not have taken place had the client taken due note of the auditor's points in the letter of weakness. In

the case Re S.P. Catterson & Ltd. (1937, 81, Act L.R. 62), the auditor was acquitted of the charge of negligence for employee's fraud in view of the fact that he had already informed the client about the unsatisfactory state in the specific areas of accounts and had suggested improvements which were not acted upon by the management.

The Council of ICAI has issued SA 265 on "Communication of Deficiencies in Internal Control to Those Charged with Governance" in this regard. This SA is effective for audits of financial statements for periods beginning on or after April 1, 2010. This Standard on Auditing (SA) deals with the auditor's responsibility to communicate appropriately to those charged with governance and management deficiencies in internal control that the auditor has identified in an audit of financial statements. This SA does not impose additional responsibilities on the auditor regarding obtaining an understanding of internal control and designing and performing tests of controls over and above the requirements of SA 315 and SA 330.

SA 260 (Revised) establishes further requirements and provides guidance regarding the auditor's responsibility to communicate with those charged with governance in relation to the audit.

The auditor is required to obtain an understanding of internal control relevant to the audit when identifying and assessing the risks of material misstatement6. In making those risk assessments, the auditor considers internal control in order to design audit procedures that are appropriate in the circumstances, but not for the purpose of expressing an opinion on the effectiveness of internal control. The auditor may identify deficiencies in internal control not only during this risk assessment process but also at any other stage of the audit. This SA specifies which identified deficiencies the auditor is required to communicate to those charged with governance and management. Nothing in this SA precludes the auditor from communicating to those charged with governance and management other internal control matters that the auditor has identified during the audit.

CASE STUDY

Accounting Systems and Internal Controls[∞]

EdukIT International Ltd. runs four private colleges which provide education and training for people in the information technology industry. Its two–year course includes training in data processing, multimedia, animation, etc. M/s. Tick Tack & Co. are conducting the interim audit for the year ended 30th June 2005. The tangible fixed assets of each college are recorded in an asset register which is maintained at each college location by the respective college manager. The system operates as described below:

- *In order to obtain new assets, a purchase requisition form is completed and approved by the manager at each college.*
- *The requisition is sent to the head office, where the purchases officer checks the requisition for approval and completes the purchase order for the new asset.*

[∞] Adapted from the case study published in Modern Auditing, Graham W Cosserat, (second edition), John Wiley & Sons, pg. 252.

- *Assets costing more than ₹ 50,000, are approved by the head of the Accounts Department. All assets over ₹2,00,000 require Board of Directors' approval.*
- *The purchase order is then sent to the supplier and a copy is sent to the central store at the location of the head office.*
- *The asset is received by the central store where the receiving clerk checks that all the asset details agree with those on the goods received note and the copy of the purchase order. The receiving clerk then issues the asset with its computer-generated sequential barcode number. This barcode is fixed to the asset and written on the goods received note and the supplier invoice.*
- *The relevant college manager inputs the new asset details into the asset register using a copy of the purchase order, the original requisition and the asset's barcode.*
- *For disposal or write-off of an asset, and asset disposal write-off form is completed by the relevant college manager, signed and sent to the head office. Disposals and write-offs are approved by the head of the Accounts Department. A copy of the form is filed at the head office and the approved original returned to the college manager for action. The college manager then updates the fixed asset register for the subsequent disposals/write-off.*
- *The asset register is maintained on tailored fixed assets accounting software systems, known as FAST and reconciled to the general ledger by each college manager monthly.*
- *The FAST system calculates depreciation automatically each month using the rate input by the college manager at the time the asset was added to the register.*

Queries to the Readers

i) Identify five internal control strengths in the above case on which the auditor can place reliance.

ii) What tests of control should be designed to evaluate the effectiveness of each of the controls identified.

Annexure

The Sarbanes-Oxley Act of 2002

The Sarbanes–Oxley Act of 2002, also known as the Public Company Accounting Reform and Investor Protection Act of 2002 and commonly called SOX or Sarbox; is a United States federal law passed in response to a number of major corporate and accounting scandals including those affecting Enron, Tyco International, and WorldCom.

Sarbanes Oxley Act, 2002

The Sarbanes Oxley Act of 2002 established corporate accountability and civil and criminal penalties for white – collar crimes. The act contains eleven titles, the summary of which is given hereunder:

Title I - Public Company Accounting Oversight Board (PCAOB) Established in an independent private board, to regulate the accounting profession, to be dominated by executives and experts from outside the accounting profession (a self-regulatory body so far). This setup aims at establishing Public confidence in the 'Report of independent Registered Public Accounting Firm' and to protect the interest of investors. The PCAOB requires the Public Accounting Firms to register with the Board and to follow certain regulations for audit of Public Companies

Title II – Auditor Independence

The auditors of Public Companies to follow:

- Regulatory authorities –Securities Exchange Board (SEC) as SEC was entrusted to issue rules implementing several of the provisions of Sarbanes Oxley Act.
- To comply with the PCAOB rules and regulations.
- To enhance the rights, duties and responsibilities of the Audit Committee.

Title III – Corporate Responsibility

- The Audit Committee to be more independent through enhancement of their Oversight responsibilities and one of the Audit Committee member to be "Financial Expert"
- Requires the Chief Executive Officer (CEO) and Chief Financial Officer(CFO) to issue certification of quarterly financial results and annual reports to SEC as part of compliance with form 10-K quarterly Report under Section 13 or 15(d) of the Security and Exchange Act of 1934 or Transition Report pursuant to Section 13 or 15(d) of the Securities Exchange Act of 1934.
- Provides rules of conduct for companies management and their officers regarding pension matters.
- To comply with the Securities and Exchange Board rules requiring attorneys to report violations of securities laws to the company's CEO or Chief Legal Counsel and to Audit Committee if no action is taken.

Title IV – Enhanced Financial Disclosures

- Obligatory for the companies to provide objective and transparency in disclosure of financial results having established effectiveness of internal control systems for financial reporting and disclosures covering off balance sheet transactions.
- Disclosure the corporate mission statement and corporate ethics and their implementation.
- Disclosure by CEO, directors, management of the company and principal stockholders involving company securities.

Title V- Analyst Conflicts of Interest

- Declaration by Securities Exchange Committee (SEC) of rules to address conflicts of interest arising when securities analysts recommend equity securities buying and selling in their Research Report and announcement to public.

Title VI – Commission Resources and Authority

- To provide additional funding to SEC.
- Power to SEC and federal courts to censure and impose prohibitions on persons and corporate entities.

Title VII – Studies and Reports

- Federal regulatory bodies to conduct studies regarding Accounting firms, Credit Rating Agencies, violation of laws, rules and regulations by various agencies concerning corporate affairs and action involving securities laws.

Title VIII – Corporate and Criminal Fraud Accountability

- To enforce tougher civil and criminal penalties for fraud and accounting scandals, securities fraud and certain other forms of obstruction of justice.
- In case of violation of securities laws there may be debts non-dischargeable.
- Protect employer against corporate whistle blowers (person who provide evidence of fraud in the company).

Title IX – White- Collar Crime Penalty Enhancements

- Tougher practices for CEO's guilty of wrong doing and other fraud such as mail and wire fraud and ERISA violations.
- Chief Executive Officer (CEO) and Chief Financial Officer (CFO) to issue certification in their quarterly, Half-yearly and Annual Reports to SEC forming part of Form 10 K and 10 Q under Section 13 or 15(d) of the Securities Exchange Act of 1934 and impose penalties for certifying a misleading or fraudulent report.

Title X – Corporate Tax Returns

- CEO should sign company's federal tax returns.

Title XI – Corporate Fraud and Accountability

Provide regulatory bodies and courts to take various actions –civil and criminal proceedings in connection of misstatements amounting to accounting scandals and fraudulent financial reports, other frauds on securities matters, obstruction of justice and retaliating against corporate whistleblowers.

Overview of PCAOB'S Requirements for Auditor Attestation of Control Disclosures

Auditing Standards of the Public Company Accounting Oversight Board (PCAOB) has the following key requirements:

- The design of controls-relevant assertions related to all significant accounts and disclosures in the financial statements ;
- Information about how significant transactions are initiated, authorized, supported, processed, and reported ;

- Enough information about the flow of transactions to identify where material misstatements due to error or fraud could occur ;
- Controls designed to prevent or detect fraud, including who performs the controls and the regulated segregation of duties ;
- Controls over the period-end financial reporting process ;
- Controls over safeguarding of assets ;
- The results of management's testing and evaluation.

Internal controls - *Under Sarbanes-Oxley, two separate certification sections came into effect – one civil and the other criminal. Section 302 of the Act mandates a set of internal procedures designed to ensure accurate financial disclosure. The signing officers must certify that they are "responsible for establishing and maintaining internal controls" and "have designed such internal controls to ensure that material information relating to the company and its consolidated subsidiaries is made known to such officers by others within those entities, particularly during the period in which the periodic reports are being prepared." The officers must "have evaluated the effectiveness of the company's internal controls as of a date within 90 days prior to the report" and "have presented in the report their conclusions about the effectiveness of their internal controls based on their evaluation as of that date."*

Moreover, under Section 404 of the Act, management is required to produce an "internal control report" as part of each annual Exchange Act report. The report must affirm "the responsibility of management for establishing and maintaining an adequate internal control structure and procedures for financial reporting." The report must also "contain an assessment, as of the end of the most recent fiscal year of the Company, of the effectiveness of the internal control structure and procedures of the issuer for financial reporting." Id. To do this, managers are generally adopting an internal control framework such as that described in COSO.

Information Technology and SOX 404

The PCAOB suggests considering the Committee of Sponsoring Organizations of the Treadway Commission (COSO) framework in management/auditor assessment of controls. Auditors have also looked to the IT Governance Institute's "COBIT: Control Objectives of Information and Related Technology" for more appropriate standards of measure. This framework focuses on information technology (IT) processes while keeping in mind the big picture of COSO's "control activities" and "information and communication". However, these certain aspects of COBIT are outside the boundaries of Sarbanes-Oxley regulation. Refer to the Study Material of Information System Control and Audit for a detailed discussion on COBIT.

The financial reporting processes of most organizations are driven by IT systems. Few companies manage their data manually and most companies rely on electronic management of data, documents, and key operational processes. Therefore, it is apparent that IT plays a vital role in internal control. As PCAOB's states:

> *"The nature and characteristics of a company's use of information technology in its information system affect the company's internal control over financial reporting."*

Chief information officers are responsible for the security, accuracy and the reliability of the systems that manage and report the financial data. Systems such as ERP (Enterprise Resource Planning) are deeply integrated in the initiating, authorizing, processing, and reporting of financial data. As such, they are inextricably linked to the overall financial reporting process and need to be assessed, along with other important process for compliance with Sarbanes-Oxley Act. So, although the Act signals a fundamental change in business operations and financial reporting, and places responsibility in corporate financial reporting on the chief executive officer (CEO) and chief financial officer (CFO), the chief information officer (CIO) plays a significant role in the signoff of financial statements.

The SEC identifies the COSO framework by name as a methodology for achieving compliance. The COSO framework defines five areas, which when implemented, can help support the requirements as set forth in the Sarbanes-Oxley legislation. These five areas and their impacts for the IT Department are as follows:

Risk Assessment - Before the necessary controls are implemented, IT management must assess and understand the areas of risk affecting the completeness and validity of the financial reports. They must examine how the company's systems are being used and the current level and accuracy of existing documentation. The areas of risk drive the definition of the other four components of the COSO framework.

Control Environment - An environment in which the employees take ownership for the success of their projects will encourage them to escalate issues and concerns, and feel that their time and efforts contribute to the success of the organization. This is the foundation on which the IT organization will thrive. Employees should cross train with design, implementation, quality assurance and deployment teams to better understand the entire technology lifecycle.

Control Activities - Design, implementation and quality assurance testing teams should be independent. ERP and CRM systems that collect data, but feed into manual spreadsheets are prone to human error. The organization will need to document usage rules and create an audit trail for each system that contributes financial information. Further, written policies should define the specifications, business requirements and other documentation expected for each project.

Monitoring - Auditing processes and schedules should be developed to address the high risk areas within the IT organization. IT personnel should perform frequent internal audits. In addition, personnel from outside the IT organization should perform audits on a schedule that is appropriate to the level of risk. Management should clearly understand and be held responsible for the outcome of these audits.

Information and Communication - Without timely, accurate information, it will be difficult for IT management to proactively identify and address areas of risk. They will be unable to react to issues as they occur. IT management must demonstrate to company management an understanding of what needs to be done to comply with Sarbanes-Oxley.

U.S. and non-U.S. public companies have been subject to the disclosure controls and procedures and the internal accounting controls certification requirements of Section 302 of the Act since August 29, 2002, when the SEC published its final rules regarding Certification of Disclosure in Companies' Quarterly and Annual Reports (the "August 29th Final Rules"). U.S and non-U.S. Public Companies have also been subject to the certification requirements of Section 906 of the Act since July 30, 2002.

Difference Between Disclosure Controls and Procedures and Internal Control over Financial Reporting

Because both the August 29th Final Rules and the June 5th Final Rules deal with "Disclosure Controls And Procedures" and "Internal Control Over Financial Reporting," it is important to understand the basic difference between them.

'Disclosure Controls and Procedures' are meant to ensure, as far as possible, that all the information required by law to be included in the periodic reports filed with the SEC is made available to those responsible for preparing them in a complete and timely fashion. ' Internal Control Over Financial Reporting' is meant to ensure the integrity of the financial statements and guard the assets of the company. At the bookkeeping level, these procedures are designed to enforce the proper recording of income and expenditure so that revenues are deposited into the company's bank account and unauthorized expenditures do not leave the company's bank account. At the executive level, these procedures are designed to prevent manipulation of revenues and expenses, such as illegal transfers from expense accounts to capital accounts, in which management may be tempted to engage in order to hit the end of the period "whispered numbers".

Because most periodic reports contain financial statements, there is some inevitable overlap between the two sets of controls. Considering the accounting lapse in the US , this overlap is considered as a good procedure. The Disclosure Controls and Procedures and The Internal Control Over Financial Reporting are sometimes collectively referred to in this advisory as "the Controls and Procedures."

Evaluation of Disclosure Controls and Procedures - *The disclosure committee may plan to review and evaluate the check list at least quarterly in the case of U.S. companies and annually in the case of non-U.S. companies for the following:*

- staffing inadequacies in the disclosure process;
- the level of experience of those drafting the reports;
- the reliability of the information systems used;
- whether those preparing the reports have access to the persons that have the information required and whether such persons are responsive to requests for information;
- whether sufficient time was allowed for review, comment and Q&A on drafts; whether transaction files were complete or were missing documents;

- whether material transactions and issues were included in early drafts and how long did it take for issues to surface;
- whether disclosures were accurate; whether form checks revealed any problems and if so whether they were corrected;
- whether there are adequate controls over related party transactions; and
- Whether there was sufficient time to discuss issues and maintain a sufficient dialog between the gatekeepers of the information. The results of this periodic evaluation should be discussed with the CEO, CFO, the board of directors and the audit committee.

Other Functions of the Disclosure Committee - *Other functions of the disclosure committee would include overseeing and coordinating the collection of information, resolving questions about the materiality of a development, reviewing and advising on the content of disclosure, drafting of disclosure and communication with the investing public, and recommending to the board, the audit committee, the CFO and the CEO, the filing of the report.*

Purpose of Internal Control over Financial Reporting

The establishment, maintenance and periodic evaluation of Internal Control Over Financial Reporting required by Section 404 of the Act is important in view of the fact that in auditing financial statements, outside accountants conduct and rely upon samplings and random checks rather than upon an exhaustive review of each transaction. This method of sampling and spot checking is justified if a reliable system of Internal Controls *Over* Financial Reporting is in place because it provides a level of comfort that there are checks and balances which monitor the day to day financial operations of the company. If on the other hand, no reliable Internal Control *Over* Financial Reporting exists, the accountant would have to conduct tests of transactions and perform additional analyses in order to accumulate sufficient evidence to support its opinion on the financial statements.

1 Procedures To Be Included In the Internal Control Over Financial Reporting - *Internal Control Over Financial Reporting should include policies and procedures that provide reasonable assurance that (i) records are maintained that fairly reflect purchase and sales of the company's assets,(ii) that transactions are properly recorded so as to permit the preparation of GAAP financial statements, (iii) receipts and expenditures are being made in an authorized fashion and (iv) unauthorized use of company assets that could have a material effect on the financial statements will be timely detected.*

2 Extent of Management's Duty to Assess and Report on the Company's Internal Control Over Financial Reporting - *In order to ensure the reliability of the Internal Control Over Financial Reporting at all times, management is required to evaluate the effectiveness of those controls on a periodic basis and to include a report of such evaluation in the annual report, which evaluation must be attested to by the company's outside accountants. Under the Section 404 proposed rules, management would have been required to evaluate the effectiveness of the internal controls quarterly. Recognizing that this would be too burdensome, the June 5th Final Rules only require quarterly evaluation of changes that have materially affected, or are reasonably likely to materially affect, the Company's Internal Control Over Financial Reporting. Whereas a U.S. public company would have to report these changes quarterly, a non-U.S public company would only have to report them in its annual report.*

If, in the course of the evaluation, management discovers any deficiency in the design or operation of Internal Control Over Financial Reporting that could adversely affect a company's ability to record, process, summarize and report financial data consistent with the assertions of management in the company's financial statements, then management must disclose this material weakness in the report.

3 Procedures To Be Followed by Management in Preparing the Report of the Effectiveness of Internal Control Over Financial Reporting - *The June 5th Final Rules do not specify the method or procedures to be performed in an evaluation and such method will vary from company to company. They do, however, require management to maintain the documentation that supports its assessment of the effectiveness of the company's Internal Control Over Financial Reporting. The documentation regarding the design of internal controls and the testing process should provide reasonable support (i) for the evaluation of whether the control is designed to prevent or detect material misstatement or omissions, (ii) for the conclusion that the tests were appropriately planned and performed and (iv) that the results of the tests were appropriately considered. In performing their evaluation of the design and effectiveness of the Internal Control Over Financial Reporting, management should review (i) the company's controls over initiating, recording, processing and reconciling account balances, classes of transactions and disclosures and related assertions included in the financial statements; controls related to the initiation and processing of non-routine and non-systematic transactions; controls relating to the selection and application of appropriate accounting policies and controls relating to the prevention, identification and detection of fraud.*

4 Location in the Annual Report of the Management's Report on the Effectiveness of Internal Control Over Financial Reporting - *Form 10-K for annual reports of U.S. public companies has been amended by adding Item 9A entitled "Controls and Procedures" to the annual report on Form 10-K. Form 20-F for annual reports for non-U.S. public companies has been amended by revising Item 15 of Part II. After the Second Compliance Date, these amendments will require a company's annual report to include an internal control report of management that contains (i) a statement of managements responsibility for establishing and maintaining internal controls over financial reporting for the company, (ii) a statement identifying the framework used by management to conduct the required evaluation (iii) managements assessment of the effectiveness of the company's Internal Control Over Financial Reporting as of the end of the company's most recent fiscal year, which assessment must include disclosure of any material weakness in the company's Internal Control Over Financial Reporting identified by management and (iv) a statement that the accounting firm that audited the financial statements included in the annual report has issued an attestation report on management's assessment of the company's internal control over financial reporting, which report must be filed as part of the company's annual report with the SEC. For public companies that are Accelerated Filers, including non-U.S. public companies that are Accelerated Filers, the Second Compliance Date by which they must comply with the internal control report requirement is the date that the company files its first annual report for fiscal years ending on or after June 15, 2004. For public companies that are not Accelerated Filers, the Second Compliance Date by which they must comply with the internal control report requirement is the date that the company files its first annual report for fiscal years ending on or after April 15 2005.*

5 Framework To Be Adopted by Management in Evaluating the Internal Control Over

Financial Reporting - *Although the SEC has not mandated any particular framework for the evaluation of the effectiveness of the Internal Control Over Financial Reporting, the framework used must be free of bias, permit qualitative and quantitative measurements, be sufficiently complete to include factors that would alter a conclusion about the effectiveness, and be relevant to an evaluation of internal control.*

6 What Must the Outside Accountant's Attestation on Management's Internal Control Report Include and What Accounting Standards Will Be Used For Such Attestation?- *The June 5th Final Rules require each annual report to include an attestation by the company's outside accountants in which the accounting firm expresses an opinion, or states that an opinion cannot be expressed and if not, why not, about management's assessment of the effectiveness of the company's Internal Control Over Financial Reporting in accordance with standards on attestation engagements. The Act requires the new Public Company Accounting Oversight Board to establish standards for these attestation reports.*

7 Can Management Delegate the Evaluation of the Internal Control over Financial Reporting to the Company's Outside Accountants? - *Management cannot delegate the evaluation of the Internal Control Over Financial Reporting to the company's outside accountants because under the SEC's rules of auditor independence (see Carter Ledyard & Milburn's LLP client advisory dated May 2003 on Audit Committee and Financial Reporting for U.S. and non-U.S companies under the Sarbanes Oxley Act), one of the prohibited non-audit services that an outside accountant may not provide to its audit client is the monitoring of internal controls. Nevertheless, because under Section 404 of the Act, the outside accountant must attest to the effectiveness of management's evaluation of the internal controls, the outside accountant must be involved in the assessment. Accordingly, management must be actively involved in the evaluation of the internal controls by the outside accountants and coordinate the process with them.*

8 Do the Periodic Report Certification Requirements and the Controls and Procedures Apply to Non U.S Public Companies and to Current Reports on Form 8-K, Proxy Materials and Information Statements? - *It should be noted that the certification and Controls and Procedures apply to annual reports filed by Foreign Private issuers on Forms 20-F and 40-F. Although the certification is not required for reports of Foreign Private Issuers on Form 6-K, the Disclosure Controls and Procedures for generating a 6-K, especially those incorporating financial data, must be in place. These Controls and Procedures should be designed to ensure timely filing of Form 6-K reports via EDGAR (required since November 4, 2002) and to ensure that all information included in a Form 6-K is complete and accurate in all material respects.*

Current reports such as reports on Forms 8-K, 6-K, proxy materials and information statements are not covered by the Section 302 certification requirement. Disclosure Controls and Procedures for these reports however, are required to be designed, maintained and evaluated to ensure full and timely disclosure even though there is no certification requirement. In this connection, companies should build in to their Disclosure Controls and Procedures the mechanisms necessary to allow them to comply with a proposed amendment of the SEC which would require them to report on Form 8-K, 22 categories of events within two days of their occurrence.

[Certain materials of this section are sourced from Carter, Ledyard and Milburn LLP for which we acknowledge them with thanks]